21. November 2019

DALLMER

grating RHS 15, massive grate, non-slip, secured, 150 x 150 mm

Product No. **500144**
EAN: 4001636500144
Discount group 2

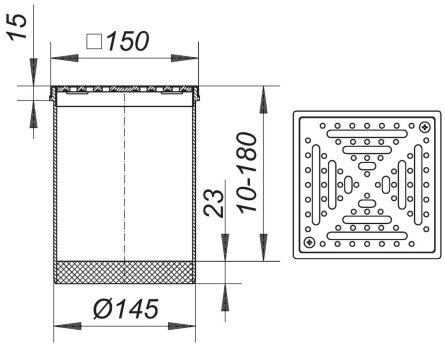

used with floor drains type 54, 55, 57, 58, 61 and 61/1
spigot polypropylene, frame 304 stainless steel, 150 x 150 mm

grate 5 mm 316Ti stainless steel, secured,
conforming to DIN 51097 in swimming and shower areas non-slip class B, conforming to DIN 51130 non-slip class R 12, load class L 15 (1.5 t)

Product No.	Description	Dimensions
591005	extension S 15	
591012	extension S 15, side inlet DN 40	
542052	Floor drain body type 54 DallBit, DN 50/DN 70	DN 50/DN 70
541055	Floor drain body type 54, DN 50/DN 70	DN 50/DN 70
552051	Floor drain body type 55 DallBit, inlet DN 50, DN 50/DN 70	DN 50/DN 70
551054	Floor drain body type 55, inlet DN 50, DN 50/DN 70	DN 50/DN 70
572073	Floor drain body type 57 DallBit, DN 70/DN 100	DN 70/DN 100
571076	Floor drain body type 57, DN 70/DN 100	DN 70/DN 100
582072	Floor drain body type 58 DallBit, inlet DN 50, DN 70/DN 100	DN 70/DN 100
581075	Floor drain body type 58, inlet DN 50, DN 50/DN 100	DN 70/DN 100
612762	floor drain body type 61 GA DallBit, DN 100 SML	DN 100 SML
612724	floor drain body type 61 GA DallBit, DN 50 SML	DN 50 SML
612748	floor drain body type 61 GA DallBit, DN 70 SML	DN 70 SML
611765	floor drain body type 61 GA, DN 100 SML	DN 100 SML
611727	floor drain body type 61 GA, DN 50 SML	DN 50 SML
611741	floor drain body type 61 GA, DN 70 SML	DN 70 SML

Dallmer GmbH + Co KG · Wiebelsheidestraße 25 · 59757 Arnsberg / Germany · Tel.: +49 2932 9616-0 · Fax: +49 2932 9616-222
www.dallmer.de · info@dallmer.de

Subject to modifications due to technical development, errors and misprints.

21. November 2019

DALLMER

612892	floor drain body type 61 HT DallBit PP NIRO, DN 100	DN 100
612847	floor drain body type 61 HT DallBit PP NIRO, DN 70	DN 70
612069	Floor drain body type 61 HT DallBit, DN 100	DN 100
612021	Floor drain body type 61 HT DallBit, DN 50	DN 50
612052	Floor drain body type 61 HT DallBit, DN 50/DN 70	DN 50/DN 70
611062	Floor drain body type 61 HT, DN 100	DN 100
611024	Floor drain body type 61 HT, DN 50	DN 50
611055	Floor drain body type 61 HT, DN 50/DN 70	DN 50/DN 70
611895	floor drain body type 61 HT, PP-NIRO, DN 100	DN 100
611840	floor drain body type 61 HT, PP-NIRO, DN 70	DN 70
612557	floor drain body type 61/1 HT DallBit, inlet DN 50, DN 50/DN 70	DN 50/DN 70
611550	floor drain body type 61/1 HT, inlet DN 50, DN 50/DN 70	DN 50/DN 70
591050	hair sieve S 15, d: 144 mm	d: 144 mm
562005	raising piece type 550 DallBit S 15	
560001	raising piece type 550 with sealing kit S 15	
560018	raising piece type 550 without sealing kit S 15	
590220	vandal resistant screws, 2 pieces, M 6 x 10	M 6 x 10

Dallmer GmbH + Co KG · Wiebelsheidestraße 25 · 59757 Arnsberg / Germany · Tel.: +49 2932 9616-0 · Fax: +49 2932 9616-222
www.dallmer.de · info@dallmer.de

Subject to modifications due to technical development, errors and misprints.